USSR / Pharmacology, Toxicology. Anticonvulsants Drugs. V

Abs Jour: Ref Zhur-Biol., No 9, 1958, 42332.

Author : Kaverina, N. V.
Inst : Not Given.
Title : The Anticonvulsive Properties of a Series of N-replacing β-chlorpropioamides.

Orig Pub: Farmakol. i toksikologiya, 1957, 20, No 4, 20-26.

Abstract: The correlation between the chemical structure and the anticonvulsive action of a series of N-replacing derivatives of γ-chlorpriopioamide was studied for the purpose of achieving new active drugs. The anticonvulsive action of the experimental drugs was studied on mice, rats and rabbits with convulsions produced by camphor, corazol, cordiamine, strychinine, picrotoxin, nicotine and arecoline. The ability of the drugs to raise the

Card 1/2

Country : USSR
Category : Pharmacology and Toxicology. Ganglionic Blocking Preparations
Abs. Jour. : Ref Zhur-Biol, No 13, 1958, No 61414

Author : Kaverina, N. V.
Institut. : -
Title : Effects of Certain Ganglionic Blocking Drugs upon Coronary Circulation

Orig Pub. : Byul. eksperim. biol. i med., 1957, 44, No 10, 68-72

Abstract : The effects of ganglionic blocking drugs upon the outflow of the blood (OB) from the coronary sinus was studied in experiments on cats. The preparations were introduced intravenously in doses of 2-10 mg./kg. Tetamon [tetraethylammonium iodide] increases OB by 8-40%, and maximally by 60%. Duration of the effect is 10-15 minutes. Intensity of the effect depends on the dose of the preparation and on the amount of initial blood flow. When the volume of OB is

Card: 1/2 Lab. of Particular Pharmacology Inst. Pharmacology & Chemotherapy AMS USSR.

V

USSR / Pharmacology. Toxicology. Tranquilizers.

Abs Jour : Ref. Zhur - Biologiya, No. 3, 1959, 13767

Author : Kaverina, N. V.
Inst : -
Title : The Influence of Some Derivatives of the Phenotiazine Series on Coronary Blood Circulation.

Orig Pub : Farmakol. i toksikologiya, 1958, 21, No. 1, 39-43

Abstract : In acute and chronic experiments, the influence of mepazine (I) and aminazine (II) on the coronary blood circulation in cats was studied by means of ECG. I intravenously introduced in a dose of 2 mg/kg increased the blood outflow from the coronary sinus by 40-50% and lowered the blood pressure (BP) by 15-20 mm of mercury column. The velocity of blood flow returned

Card 1/3 Lab Particular Pharmacology Inst Pharmacology & Chemotherapy AMS USSR

VIKHLYAYEV, Yu.I.; KAVERINA, N.V.

Pharmacology of chloracizine [with summary in English]. Farm. i toks 22 no.1:28-33 Ja-F '59. (MIRA 12:4)

1. Laboratoriya chastnoy farmakologii (zav. - deystvitel'nyy chlen AMN SSSR prof. V.V. Zakusov) Instituta farmakologii i khimioterapii AMN SSSR.

(MUSCLE RELAXANTS,
2-chloro-10-(3-diethylaminopropionyl)-phenothiazine, pharmacol. (Rus))
(PHENOTHIAZINE, rel. cpds.
same)

KAVERINA, N.V.

Effect of analgesic drugs on the coronary circulation. Biul.eksp. biol.i med. 47 no.8:67-70 Ag '59. (MIRA 12:11)

1. Iz laboratorii chastnoy farmakologii Instituta farmakologii i khimioterapii (dir. - deystvitel'nyy chlen AMN SSSR V.V. Zakusov) AMN SSSR, Moskva. Predstavlena deystvitel'nym chlenom AMN SSSR V.V. Zakusovym.

(CORONARY VESSELS, pharmacol.)
(ANALGESICS AND ANTIPYRETICS pharmacol.)

KAVERINA, N.V.; KISIN, I.Ye.

Methods for studying coronary circulation. Uch.zap.Inst.farm.i khimioter.AMN SSSR no.2:27-47 '60. (MIRA 15:10)

1. Laboratoriya chastnoy farmakologii (zav. - deystv. chlen AMN SSSR prof. V.V.Zakusov).
(CORONARY VESSELS)

KAVERINA, N.V.

Effect of analgesic substances on cardiac blood supply. Uch.zap. Inst.farm.i khimioter.AMN SSSR no.2:93-104 '60. (MIRA 15:10)

1. Laboratoriya chastnoy farmakologii (zav. - deystv. chlen AMN SSSR, prof. V.V.Zakusov).

(CORONARY VESSELS)
(ANALGESICS)

KAVERINA, N.V.; KAREVA, G.F.

Effect of adrenaline and noradrenaline on cardiac vessels. Farm.i toks. 23 no.6:516-521 N-D '60. (MIRA 14:3)

1. Laboratoriya chastnoy farmakologii (zav. - deystvitel'nyy chlen AMN SSSR prof. V.V.Zakusov) Instituta farmakologii i khimioterapii AMN SSSR.

(ADRENALINE) (ARTERENOL)
(CORONARY VESSELS)

KAVERINA, N.V.

Mechanism of the action of nitroglycerine on the cardiac vessels. Biul. eksp. biol. i med. 49 no. 5:75-78 My '60. (MIRA 13:12)

1. Iz laboratorii chastnoy farmakologii (zav. - deystvitel'nyy chlen AMN SSSR V.V. Zakusov) Instituta farmakologii i khimioterapii AMN SSSR, Moskva. Predstavlena deystvitel'nym chlenom AMN SSSR V.V. Zakusovym.

(NITROGLYCERIN) (CORONARY VESSELS)

KAVERINA, N.V.

Effect of analgesic substances on reflex reactions of the coronary vessels. Biul. eksp. biol. i med. 50 no. 11:57-61 N '60. (MIRA 13:12)

1. Iz laboratorii chastnoy farmakologii (zav. - deystvitel'nyy chlen AMN SSSR V.V. Zakusov) Instituta farmakologii i khimioterapii AMN SSSR, Moskva.
(CORONARY VESSELS) (ANALGESICS)

VIKHLYAYEV, Yu.I.; KAVERINA, N.V.

Chloracizine. Med.prom. 15 no.9:41-44 S '61. (MIRA 14:9)

1. Institut farmakologii i khimioterapii AMN SSSR.
(PHENOTHIAZINE)

ARTEMENKO, G.N.; KAVERINA, N.V.

Chloracon — an anti-epileptic drug. Med. prom. 15 no.12:57 D '61. (MIRA 15:2)

1. Institut farmakologii i khimioterapii AMN SSSR.
(ANTICONVULSANTS)

KAVERINA, N.V.

Effect of cholinomptic substances on coronary circulation. Farm.i toks. 24 no.2:168-172 Mr-Ap '61. (MIRA 14:6)

1. Laboratoriya chastnoy farmakolgoii (zav. - deystvitel'nyy chlen AMN SSSR prof. V.V.Zakusov) Instituta farmakologii i khimioterapii AMN SSSR.
(CORONARY VESSELS) (CHOLINE) (PARASYMPATHOMIMETICS)

KAVERINA, Natal'ya Veniaminovna; REZVENTSOVA, G.A., red.; BUKOVSKAYA, N.A., tekhn. red.

[Pharmacology of the coronary blood circulation] Farmakologiia koronarnogo krovoobrashcheniia. Moskva, Medgiz, 1963. 283 p. (MIRA 16:6)

(BLOOD—CIRCULATION) (PHARMACOLOGY)

KAVERINA, N.V.

Effect of pharmacological substances on the reflex reactions of the coronary vessels caused by stimulation of the cardiac receptors. Vest. AMN SSSR 18 no.1:10-17 '63. (MIRA 16:2)

1. Institut farmakologii i khimioterapii AMN SSSR.
(CORONARY VESSELS) (REFLEXES) (DRUGS--PHYSIOLOGICAL EFFECT)

KAVERINA, N.V.; KISIN, I.Ye.

"Coronary vasodilators" by R. Charlier. Reviewed by N.V. Kaverina, I.E. Kisin. Vest. AMN SSSR 18 no.1:87-88 '63. (MIRA 16:2)
(CORONARY VESSELS) (VASODILATORS)
(CHARLIER, R.)

KAVERINA, N.V.

Effect of pharmacological substances on the nervous regulation of the tonus of coronary vessels. Uch.zap.Inst.farm. i khimioter. AMN SSSR 3:234-246'63. (MIRA 16:9)

1. Department of Pharmacology (Head - prof. V.V.Zakusov, Member of the U.S.S.R. Academy of Medical Sciences) of the Institute of Pharmacology and Chemotherapy of the U.S.S.R. Academy of Medical Sciences.
(NERVOUS SYSTEM, VASOMOTOR) (CORONARY VESSELS)
(NEUROPSYCHOPHARMACOLOGY)

KUKHANOVA, M.K.; KAVERIN, N.V.

Mechanism suppressing protein synthesis in cells infected by the Newcastle disease virus. Dokl. AN SSSR 164 no.6:1417-1420 O '65. (MIRA 18:10)

1. Institut molekulyarnoy biologii AN SSSR i Institut virusologii im. D.I.Ivanovskogo AMN SSSR. Submitted November 5, 1964.

ZAKUSOV, V.V.; KAVERINA, N.V.; MARKOVA, G.A.; MITROFANOV, V.S.

Effect of pharmacological agents on the development of myocardial lesions caused by biogenic substances. Kardiologiia 4 no.4:3-11 Jl.Ag '64 (MIRA 19:1)

1. Otdel farmakologii Instituta farmakologii i khimioterapii AMN SSSR, Moskva.

KAVERINA, N.V., prof.; [illegible]REVA, G.F.; PIDEVICH, I.N.

Pharmacological characteristics of the serotonin-reactive structures of the heart. Farm. i toks. 28 no.5:536-539 S-O '65. (MIRA 18:12)

1. Laboratoriya farmakologii serdechno-sosudistoy sistemy (zav. prof. N.V.Kaverina) Instituta farmakologii i khimioterapii (direktor - deystvitel'nyy chlen AMN SSSR prof. V.V.Zakusov) AMN SSSR, Moskva. Submitted June 22, 1964.

KAVERINA, N.V.; MIRZOYAN, R.S.; ROZONOV, Yu.B.

Mechanism of the action of monoamine oxidase inhibitors on the nervous regulation of coronary circulation. Farm. i tokr. 28 no.6:689-694 N-D '65. (MIRA 19:1)

1. Laboratoriya farmakologii serdechno-sosudistoy sistemy (zav. - prof. N.V.Kaverina) Instituta farmakologii i khimioterapii AMN SSSR, Moskva.

L 04803-67

ACC NR: AP6022178 SOURCE CODE: UR/0248/66/000/004/0009/0015

AUTHOR: Kaverina, N. V.

ORG: Institute of Pharmacology and Chemical Therapy AMN SSSR, Moscow (Institut farmakologii i khimioterapii AMN SSSR)

TITLE: Pharmacologic effect on neural regulation of coronary blood circulation

SOURCE: AMN SSSR. Vestnik, no. 4, 1966, 9-15

TOPIC TAGS: pharmacology, central nervous system, autonomic nervous system, nervous system drug, experiment animal, nerve fiber, cardiovascular system disease, amine

ABSTRACT: This is a survey of work done in experimental animals at the author's laboratory, dealing mainly with the role of free monoamines in the brain tissue. On the assumption that favorable effects exerted by certain stenocardial drugs on coronary blood flow may be related to their central effect on the sympathetic reflex reactions which cause vascular construction, the effect of a number of these stimulants was investigated by two methods: resistography of coronary vessels and electroneurographic recording of tonus and reflex response in cardiac

Card 1/4 UDC: 612.178.014.46

L 04803-67

ACC NR: AP6022178

sympathetic nerves. Separate stimulation of various groups of afferent fibers was used to evaluate particularly reflex discharges in afferent C-fibers. Analgesics (morphine, promedol) at doses of 0.75 mg/kg were found to depress simultaneously vasomotor reflexes and those on coronary vessels as well as reflex response to impulses of afferent C-fibers. To study the involvement of the adrenergic mechanism in these effects, the analgesic effect was studied under conditions of a varying level of catecholamines and serotonin in the brain tissue. Reserpin was first investigated, and intravenous doses of 0.25-0.5 mg/kg were seen fully to depress reflector responses in sympathetic cardiac nerves for 2-3 hours. This seems to parallel the release of catecholamines and serotonin from tissue depots. It was thus assumed that changes in intensity and character of reflex reactions depend on the level of monoamines in brain tissue; the effect of monoamineoxidase inhibitors (MAO) was studied, and it was found that these depress reflector reactions of coronary vessels and the blood pressure following irritation of afferent fibers of somatic nerves, and that they also effect sharp changes in the character of reflex response in the lower cardiac nerve. MAO inhibitors as well as analgesics will, in the first stage of their effect, selectively depress reflector responses caused by irritation of afferent C-fibers. This was seen with nialamid at doses of 20-40 mg/kg and lasted up to 96 hours. Two additional series of tests served to confirm the

Card 2/4

L 04803-67

ACC NR: AP6022178

participation of brain monoamines in this effect. In one, it was determined that reflexes affecting coronary vessels and blood pressure as well as reflex responses in cardiac nerves are depressed if norepinephrine or serotonin are introduced into the brain ventricle. The same applies to their precursors, DOPA and 5-oxytryptophan. In a second series, MAO inhibitor effect on vasomotor reflexes and reflex responses in cardiac nerves under conditions of exhaustion of monoamine stores in the brain was investigated; this inhibitory effect is considerably weakened if monoamines are lacking. It was concluded that the following compounds are capable of depressing reflex reactions caused by irritation of spinal afferent fibers and transmitted through the sympathetic nervous system: analgesics (morphine, promedol), MAO inhibitors, reserpin (at the stage of monoamine liberation from tissues), catecholamines and serotonin (intraventricular) and their precursors (DOPA and 5-oxytryptophan). These are apparently causing increase of monoamines in the brain, thereby affecting the decelerating neuron system. Therefore, one therapeutic effect on central regulation of blood circulation would consist in applying substances capable of interfering in the monoamine metabolism of the central nervous system. In artificially created cardiac insufficiency caused by strong activation of the sympathetic nervous system, central stimulants exert the best effect. The effect of excluding peripheral links of the

Card 3/4

L 04803-67

ACC NR: AP6022178

sympathetic-adrenal system was investigated for experimental cardiovascular spasm. It was found that exclusion of the neurogenic component of vascular tonus will result in a weaker reaction of coronary vessels to the introduction of neurotropics and myotropics. Thus, exclusion of neurohormonal effects on coronary vessels by means of therapeutics may play an important part in treating coronary insufficiency. Orig. art. has: none.

SUB CODE: 06, 07/ SUBM DATE: 04Nov65/ ORIG REF: 004/ OTH REF: 016

Card 4/4 gd

APPROVED FOR RELEASE: 06/13/2000 CIA-RDP86-00513R000721210017-0"

APPROVED FOR RELEASE: 06/13/2000 CIA-RDP86-00513R000721210017-0"

ACCESSION NR: AT4042841 S/2601/64/000/018/0183/0186

AUTHOR: Levin, G.I., Kaverina, S.N.

TITLE: Coercive force and the "induced" structure of permalloy coatings

SOURCE: AN UkrSSR. Institut metallofiziki. Sbornik nauchny*kh rabot, no. 18, 1964. Voprosy* fiziki metallov i metallovedeniya (Problems in the physics of metals and physical metallurgy), 183-186

TOPIC TAGS: permalloy coating, coating coercive force, replica analysis method, sublayer surface roughness, coating structure effect, coercive force structural dependence, induced coating structure

AABSTRACT: Permalloy coatings (60 - 90 gauge) were vacuum deposited from Fe-Ni with 82.5% Ni on aluminum sublayers (sublayer temperature 220-250C) with surface irregularities of 20-500 gauge to establish the quantitative dependence of the coating's coercive force on the degree of irregularity in the sublayer surface. The replica analysis method showed that coatings up to 90 gauge reflect the relief of the sublayer. Measurements showed that

Card 1/2

Card 1/3

APPROVED FOR RELEASE: 06/13/2000 CIA-RDP86-00513R000721210017-0"

Card 3/3

MELIKOV, Ye.Kh., ispolnyayushchiy obyazannosti dotsenta; KAVINSKIY, V.I., inch.

Construction of the basic components of men's jackets according to the given design. Nauch. trudy MTI no.29:182-187 '63. (MIRA 17:11)

1. Kafedra tekhnologii shveynogo proizvodstva Moskovskogo tekhnologicheskogo instituta legkoy promyshlennosti.

SRESELI, M.A., prof.; KAVERINA, V.V. (Leningrad)

New method of plastic surgery of the facial nerve. Vop. neirokhir. 27 no.2:47-51 Mr-Ap '63. (MIRA 17:2)

1. Kafedra operativnoy khirurgii i topograficheskoy anatomii (zav. - M.A. Sreseli) I Leningradskogo meditsinskogo instituta imeni Pavlova.

KAVERINA, V.V.

Features of the external structure of the accessory nerve.
Trudy LNI 2:37-45 '55 (MIRA 11:7)

1. Kafedra operativnoy khirurgii i topograficheskoy anatomii (zav. - prof. M.A. Sereli) Pervogo Leningradskogo meditsinskogo instituta imeni akademika I.P. Pavlova.
(ACCESSORY NERVE)

LAVRENTEVA, V.V. (Leningrad, K-175, Lesnoy prospekt, 20, kv.34)

Morphological changes observed in plastic surgery on the facial nerve by use of the anterior branch of the second cervical nerve. Arkh. anat., gist. i embr. 46 no.6:3-9 Je '64.

(MIRA 18:3)

1. Kafedra operativnoy khirurgii i topograficheskoy anatomii (zav. - prof. M.A. Sreseli) 1-go Leningradskogo meditsinskogo instituta imeni akademika Pavlova.

ALEKSANDROV, N.I.; GEFEN, N.Ye.; SHUL'ZHENKO, V.M.; ALEKSANDROV, P.M.; LEBEDINSKIY, V.A.; KAVERINA-FIRGANG, K.G.; KUZNETSOVA, V.I.; BEKKER, M.L.; VORONIN, Yu.S.

Search for effective chemical vaccines against some zoonoses. Report No.3:Development of a chemical plague vaccine and its experimental test in animals. Zhur. mikrobiol., epid. i immun. 4 no.4:66-71 Ap '63. (MIRA 17:5)

KAVERKIN, I. P.

Kaverkin, I. P. "The internal conversion upon the membrane conditioned by the magnetic radiation of the nucleus," Soobshch, Akad, nauk Gruz. SSR, 1948, No. 8, P. 463-70

SO: U-4934, 29 Oct 53, (Letopis 'Zhurnal 'nykh Statey, No. 16, 1949)

KAVERKIN, I. P.

USSR/Physics - Low temperature study FD-1901

Card 1/1 Pub. 146-21/21

Author : Andronikashvili, E. L., and Kaverkin, I. P.

Title : Rotation of helium II at great speeds

Periodical : Zhur. eksp. i teor. fiz. 28, 126-127, January 1955

Abstract : The attempts to verify experimentally the theoretical depth of the parabolic meniscus formed by rotating helium II. He presents the dependence of the magnitude of thermomechanical effect upon the speed of rotation at various temperatures. He concludes that in the transition through the critical speed the phenomenon of superfluidity not only does not disappear, but the quantitative characteristics (e.g. thermomechanical effect and the associated quantity of density ratio) remain unchanged and independent of the speed of rotation. Three references: e.g. E. L. Andronikashvili, Dissertation, Institute of Physical Problems, Academy of Sciences USSR, Moscow, 1948 (in which the experimental apparatus is described).

Institution: Institute of Physical Problems, Academy of Sciences USSR
Institute of Physics, Academy of Sciences, Georgian SSR

Submitted : June 24, 1954

38383
S/139/62/000/001/006/032
E021/E435

18.1220

AUTHORS: Sanadze, V.V., Kaverkin, I.P.

TITLE: Recrystallization in copper-gallium solid solutions

PERIODICAL: Izvestiya vysshikh uchebnykh zavedeniy. Fizika. no.1, 1962, 41-44

TEXT: Copper-gallium alloys containing 4.30, 8.13 and 11.33 atomic % gallium were prepared in a high frequency furnace using a graphite crucible. After homogenization, strip was rolled with a thickness 30 to 40 microns (99% deformation). Specimens were cut from the strip and heated from 15 sec to 10 min at 200 to 400°C followed by a water-quench. Oxide films formed at higher temperatures were removed by etching and X-ray photographs were taken. Microhardness measurements were also carried out. Microhardness-temperature curves for different holding times were drawn. The beginning of recrystallization corresponded to a fall in microhardness. Holding for longer periods displaced the curves towards the lower temperature. The X-ray measurements confirmed the results. The difference between the temperatures of the beginning and end of

Card 1/3

recrystallization increased with increase in concentration of gallium. Fig.3 shows the relation between the temperatures, °C, for beginning and end of recrystallization and the concentration of gallium (in atomic %) for a holding time of 2 minutes. A small concentration of gallium caused a considerable increase in the temperature of the beginning of recrystallization. For the samples containing 4.3, 8.13 and 11.33 atomic % gallium, the values for the energy of activation calculated from the curve of the beginning of recrystallization were 34, 28 and 30 kcal/mol and the values calculated from the curve for the end of recrystallization were 50, 34 and 47 kcal/mol, respectively. The energy of activation of nucleus-formation calculated from the number of interference spots on the X-ray photograph for the sample containing 4.3% gallium was 27 kcal/mol. Thus, at the beginning of recrystallization nearly all the energy is consumed by nucleus-formation. The energy of activation for growth of crystals was calculated by subtracting the activation energy for nucleus-formation from the activation energy at the end of recrystallization and was 23 kcal/mol. The obtained results are in agreement with

those obtained by H.L.Walker on α-brass. There are 4 figures and 2 tables.

ASSOCIATION: Gruzinskiy politekhnicheskiy institut imeni V.I.Lenina (Georgian Polytechnical Institute imeni V.I.Lenin)

SUBMITTED: December 20, 1960

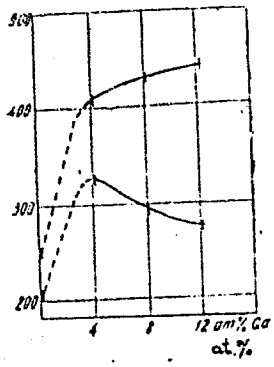

Fig.3.

KAVERKIN, I.P.

Growth of crystals in the recrystallization of copper. Trudy GPI [Gruz.] no.6:137-139 '61. (MIRA 16:4)
(Copper crystals—Growth)

L 8173-66 EWT(1)/EWA(h)

ACC NR: AP5025704 SOURCE CODE: UR/0286/65/000/018/0050/0050

AUTHOR: Kaverkin, I. Ya.

ORG: none

TITLE: A frequency spectrum analyzer. Class 21, No. 174709 [announced by All-Union Scientific Research Institute of Electric Measurement Instruments (Vsesoyuznyy nauchno-issledovatel'skiy institut elektroizmeritel'nykh priborov)]

SOURCE: Byulleten' izobreteniy i tovarnykh znakov, no. 18, 1965, 50

TOPIC TAGS: analog digital converter, frequency analyzer, frequency spectrum, information analysis, tuning device, spectrum analyzer

ABSTRACT: This Author Certificate presents a frequency spectrum analyzer containing a heterodyne mixer, intermediate frequency filter, intermediate frequency amplifier, detector, motor, control unit, and a recording device (see Fig. 1). The analyzer is designed to record the results in digital form, to reduce automatically the excess information in the analysis process, and to obtain code equivalents of the results which can be used as the input to digital devices. The output of the analyzer's detector is connected to a logic device and also, via a switch and through a delay line, to an analog-digital converter. The output of this converter is connected to a printing device. The control unit is connected, via a delay circuit, to the cycle

Card 1/2 UDC: 621.317.353

L 8173-66

ACC NR: AP5025704

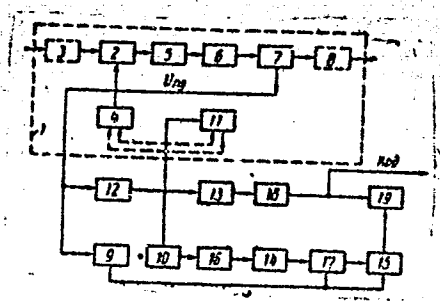

Fig. 1. 1- analyzing part of the instrument (dotted line); 2- mixer; 3- input amplifier; 4- heterodyne; 5- filter; 6- amplifier; 7- detector; 8- DC amplifier; 9- logic device; 10- control unit; 11- motor; 12- switch; 13- delay line; 14- cycle pulse generator; 14- counter; 16- delay line; 17- switch; 18- analog-digital converter; 19- digital printing device

pulse generator. The output of the generator is connected (via a switch of the logic device) to a pulse counter. To isolate automatically the moment of tuning the analyzer to the maximum of the frequency component, the logic device in the analyzer contains two differentiating elements. The first differentiating element is connected to the detector. The output of the detector is connected through an amplifier-clipper to the second differentiating element. The output of the second differentiating element is connected with the diode clipper for shaping the controlling pulse used for printing. Orig. art. has: 1 figure.

SUB CODE: DP, EC/ SUBM DATE: 24Jun64

nw

Card 2/2

KAVALEROV, G.I.; KAVERKIN, I.Ya.; SOKOLOV, S.S.

Definition of the concept of mensuration. Izm.tekh. no.8:1-3 Ag '62. (MIRA 16:4)

(Mensuration)

KAVERKSIS, I.I.

Standardization and interchangeability of elements. Trudy MIEI no.15:152-154 '61. (MIRA 14:12)

1. Glavnyy konstruktor Instituta proyektirovaniya gorodskogo i sel'skogo khozyaystva Litovskoy SSR.
(Construction industry)

SANADZE, V.V.; KAVERKIN, I.P.

Recrystallization in copper-gallium solid solutions. Izv.vys.ucheb. zav.;fiz. no.1:41-44 '62. (MIRA 15:6)

1. Gruzinskiy politekhnicheskiy institut imeni V.I. Lenina.
(Copper-gallium alloys)
(Crystallization) (Solutions, Solid)

PUGACHEV, A.N., agronom; KAVERNIKOV, N., starshiy agronom

Partial damages and quality of grain seeds. Zemledelie 27 no.7: 81-83 Jl '65. (MIRA 18:7)

1. TSentral'naya mashinoispytatel'naya stantsiya Vsesoyuznogo ob"yedineniya "Soyuzsel'khoztekhnika" (for Pugachev).
2. Brestskoye rayonnoye proizvodstvennoye upravleniye sel'skogo khozyaystva (for Kavernikov).

AUTHORS: Kasatochkin, V. I., and Kaverov, A. T. 20-117-5-31/54

TITLE: The Kinetics and the Mechanism of the Homogeneous Graphitization of Carbon (Kinetika i mekhanizm gomogennoy grafitatsii ugleroda).

PERIODICAL: Doklady AN SSSR, 1957, Vol. 117, Nr 5, pp. 837-840 (USSR).

ABSTRACT: The present paper furnishes the results of the X-ray investigation of the kinetics and of the mechanism of the graphitization of cracking pyrolytic petroleum coke subject to isothermal conditions at temperatures of 2000, 2150, 2420 and 2800°C. The graphitization took place in a furnace with a graphite heater in an atmosphere of nitrogen and argon. According to the duration of the isothermal treatment in the furnace (hkl) bands appear in the roentgenographs, the intensity and acuteness of which increases with an increasing duration of the treatment. At the same time, the half width of the (hkl) bands and of the (001) bands decreases. These modifications of the roentgenographs indicate an azimuthal orientation of the packets of the parallel basic lattices together with the occurrence and a further perfection of the three-dimensional orderliness of the carbon. Besides, a decrease of the distance d_{002} between the planes in accordance with theoretical principles is observed, which is also connected with the azimuthal orientation of the carbon layers to-

Card 1/2

The Kinetics and the Mechanism of the Homogeneous Graphitization of Carbon. 20-117

wards a more compact packing. The authors here give the relation $\gamma = \Delta d/\Delta_0 = (3,425 - d_{002})/0,069$ for the measure γ of the orderliness. Δd denoting the reduction of the distance between the planes, and Δ_0 denoting the complete interval of the modifications of d_{002} at the transition from non-graphitisated carbon to an extremely graphitisated carbon. This quantity γ has a statistical character. The non-isothermal behaviour of the samples is taken into account by a coorection factor. The constants of the velocity of isothermal graphitization at different temperatures are compiled in a table. The mean experimental value of the activation energy is almost the same in the case of cokes and amounts to $A = 92 \pm 5$ kkal/gramatom. This relatively high value speaks in favour of the fact, that the kinetics of the graphitization depends upon the chemical process. There are 4 figures, 1 table, and 4 references, 2 of which are Slavic

ASSOCIATION: Institute for Mineral Fuels, AS USSR (Institut goryuchikh iskopayemykh Akademii nauk SSSR).

PRESENTED: July 13, 1957, by A. A. Skochinskiy, Academician.
SUBMITTED: July 12, 1957.

Card 2/2

SOV/24-58-5-26/31

AUTHORS: Zamoluyev, V. K., Kaverov, A. T. and Kasatochkin, V.I. (Moscow)

TITLE: Thermo-physical Properties in the Process of Homogeneous Graphitisation of Carbon (Teplofizicheskiye svoystva v protsesse gomogennoy grafitizatsii ugleroda)

PERIODICAL: Izvestiya Akademii Nauk SSSR, Otdeleniye Tekhnicheskikh Nauk, 1958, Nr 5, pp 131-133 (USSR)

ABSTRACT: The results are described of investigations of the heat capacity, the temperature and heat conductivity and also of X-ray determination of the degree of graphitisation of the products of heat treatment of petroleum coke under isothermal conditions with various heating times at the temperatures 1800, 2000, 2150, 2300, 2400, 2600 and 2800°C. The initial petroleum cracking coke had a density of 1405 g/m^3, an ash content of 0.08% and a yield of volatiles of 5.13%. The graphitisation was effected in a furnace with a graphite heater in an atmosphere of nitrogen and argon, whereby the temperature was regulated by means of a step-transformer so that a given temperature was maintained within $\pm$ 25°C. The results are graphed in Figs 1 and 2. It was found that the heat conductivity is determined predominantly by the dimensions of the monolayers and also

Card 1/2

SOV/24-58-5-26/31

Thermo-physical Properties in the Process of Homogeneous Graphitisation of Carbon

by the valency bonds between adjacent "crystallites" and depends little on the degree of perfection of the crystal lattice of the graphite. It is concluded that for obtaining carbon-graphite materials with a relatively high thermal conductivity it is not necessary to carry out graphitisation and it is sufficient to effect the heat treatment of petroleum coke up to the initial stages of graphitisation. V. S. Shorstkin and T.V.Panfilov participated in the experimental work.
There are 2 figures and 5 references, 4 of which are Soviet, 1 English.

SUBMITTED: July 17, 1957

Card 2/2

AUTHORS: Kasatochkin, V. I., Kaverov, A. T. SOV/20-120-5-21/67

TITLE: The Electric Properties and Structure of the Transitional Forms of Carbon (Elektricheskiye svoystva i struktura perekhodnykh form ugleroda)

PERIODICAL: Doklady Akademii nauk SSSR, 1958, Vol. 120, Nr 5, pp.1007-1010 (USSR)

ABSTRACT: In this paper the results of an experimental investigation of the thermo e.m.f., of the electric resistance and of the structure of transitional forms from "amorphous carbon" to graphite are given. These forms are produced by a high-temperature treatment of different carbon samples. A homogeneous transition from the "amorphous carbon" to graphite was observed in petroleum cokes, in mineral coals and in a few other carbon samples at temperatures of 2500 - 2600°. The nature of this process is essentially a successive azimuthal orientation of the parallel layers formed in the thermal destruction of lateral carbon chains. Numerical data concerning the reduction of the distance between the layers are given. The samples were produced by an isothermal annealing for dif-

Card 1/3

ferent periods of petroleum cokes in a furnace in a nitrogen current at different temperatures. The positive sign of the coefficient α of the thermo e.m.f. confirms the semiconductor properties and the hole mechanism of electric conduction in the soot samples within the entire temperature interval, whereas in petroleum cokes this temperature range is limited by 1600 and 2800°. At t > 3000° α and the specific electric resistance ρ decrease as the distance between the layers in the homogeneous graphitization of coke. Some numerical data are given. Relations of the type α = a - b lg σ and ρ = A/σ - B exist between α and the specific electric conductivity. The change of α in the pre-crystallization stage can be explained by the following two processes in the thermal treatment: 1) a growth of the carbon layers and 2) a destruction of the lateral carbon chains. There are 4 figures, 1 table, and 8 references, 4 of which are Soviet.

SOV/20-120-5-21/67

The Electric Properties and Structure of the Transitional Forms of Carbon

AUTHOR: Institut goryuchikh iskopayemykh Akademii nauk SSSR (Institute of Mineral Fuels [illegible])

PRESENTED: February 22, 1958, by A. [illegible], Member, Academy of Sciences, USSR

SUBMITTED: February 19, 1958

1. Carbon--Phase studies 2. Carbon--Electrical properties
3. Carbon--Structural analysis 4. Carbon--Temperature factors

Card 3/3

21(1) SOV/89-7-3-19/29

AUTHORS: Kasatochkin, V. I., Zamoluyev, V. K., Kavernov, A. T.

TITLE: The Relationship Between the Thermophysical Properties and the Atomic-molecular Structure of Carbon in Homogeneous Graphitization

PERIODICAL: Atomnaya energiya, 1959, Vol 7, Nr 3, pp 272-275 (USSR)

ABSTRACT: The following properties of a cracked petroleum coke are experimentally determined: Specific heat, temperature conductivity, thermal conductivity, and degree of graphitization, the samples being investigated under various isothermal conditions and temperatures. The initial material had a density of 1.405 g/cm^3, a salt content of 0.08%, and a yield of volatile substance of 5.13%, a volume weight of 0.50 - 0.56 g/cm^3, and a grain composition within the range of 0 - 0.5 mm. Graphitization was carried out in a graphite furnace in nitrogen- or argon atmosphere. The degree of graphitization was radiographically measured according to reference 4 from the distance between layers. The X-ray pictures of the graphitization products were produced in cylindrical 70 and 43 mm chambers by means of filtrated copper- and iron radiation. The specific heat

Card 1/3

SOV/89-7-3-19/29

The Relationship Between the Thermophysical Properties and the Atomic-molecular Structure of Carbon in Homogeneous Graphitization

and the temperature conductivity coefficient were measured at 20 - 25°C according to references 5 and 6. The results obtained by parallel experiments deviated from each other by not more than 1%. From the specific heat and the temperature conductivity coefficient, the thermal conductivity coefficient was calculated. The measuring results are shown graphically, viz.: variation of the distance between layers $d_{(002)}$ depending on the isothermal graphitization time; variation of specific heat and of the temperature conductivity coefficient depending on the isothermal graphitization time (in both cases the latter amounted to 10 - 180 min); variation of the specific heat and of the temperature conductivity coefficient and the degree of graphitization depending on graphitization temperature (1100 - 2800°C); relationship between specific heat, temperature conductivity coefficient, thermal conductivity coefficient and degree of graphitization. The endeavor is made to give a physical interpretation of the deviations of the curves from the linear course. On the basis of the results obtained it is possible to produce various

Card 2/3

SOV/89-7-3-19/29

The Relationship Between the Thermophysical Properties and the Atomic-molecular Structure of Carbon in Homogeneous Graphitization

carboniferous substances having certain definite thermo-physico properties from petroleum-coke. There are 4 figures and 9 references, 7 of which are Soviet.

SUBMITTED: November 21, 1957

Card 3/3

84670

S/020/60/135/001/023/030
B004/B056

17.4313 only 2107, 2112, 2312

11.5100

AUTHORS: Kasatochkin, V. I., Zamoluyev, V. K., Kaverov, A. T., and Usenbayev, K.

TITLE: The Thermophysical Properties of the Transition Forms of Carbon

PERIODICAL: Doklady Akademii nauk SSSR, 1960, Vol. 135, No. 1, pp. 121-124

TEXT: The authors give a report on the determination of the specific heat c_p, of the temperature coefficient a of thermal conductivity and of the thermal conductivity λ of the transition forms of carbon, obtained by heating petroleum coke, channel black, and thermal carbon black to temperatures of between 1000 and 3000°C in nitrogen- or argon atmosphere. c_p and a were determined according to G. M. Kondrat'yev (Ref. 7). λ was calculated according to the equation $\lambda = c_p a \beta$ (β = weight by volume). The measurement results for c_p and a are represented in Figs. 1,2. the

Card 1/4

84670

The Thermophysical Properties of the Transition Forms of Carbon

S/020/60/135/001/023/030
B004/B056

thermostable =C=C=C= bonds between the carbon layers up to 3000°C. In channel black, c_p is low up to about 1300°C, it has a maximum at 1700°C, whereas between 2700 and 3000°C, c_p, a and λ fall. Channel black does not crystallize, γ_{max} = 0.09. Also in this case the cause is a (denser) spatial network of bonds, formed by the splitting off of oxygen-containing radicals and the forming of allene-carbon chains between the carbon layers. In fossile coals, a melting of the spatial network of bonds occurs at low temperatures similar as in the case of organic polymers. The properties of the carbon materials thus depend on the polymeric character of their structure and on the nature of the spatial network of bonds. Only for γ = 1 there is no spatial network of bonds. There are 4 figures, 1 table, and 12 references: 11 Soviet and 1 British.

ASSOCIATION: Institut goryuchikh iskopayemykh Akademii nauk SSSR (Institute of Mineral Fuels of the Academy of Sciences, USSR)

Card 3/4

S/062/61/000/001/002/016
B101/B220

AUTHORS: Dubinin, M. M., Zaverina, Ye. D., Ivanova, L. S., Kaverov, A. T., and Kasatochkin, V. I.

TITLE: Study of the nature of the micropore structure of activated carbons. Communication 1. Activated carbons from phenol-aldehyde resins

PERIODICAL: Izvestiya Akademii nauk SSSR. Otdeleniye khimicheskikh nauk, no. 1, 1961, 17-28

TEXT: The aim of the authors was to characterize the micropore structure of activated carbons by adsorption of molecules whose dimensions are comparable to those of the micropores. The present report deals with activated carbons from phenyl-aldehyde resin, whose structure has been modified considerably by treatment at various temperatures. The method of obtaining the carbon has been described previously (Refs. 11, 12). The product obtained by carbonization of the resin has been activated in a rotating quartz retort at 950°C till the loss in weight amounted to about

Card 1/5

50%. This specimen was termed A-950. Its heating in nitrogen to 1750, 2000, and 2300°C resulted in the specimens A-1750, A-2000, A-2300. A-3000 was obtained by heating in an electric resistance furnace of the type PC -100 (RS-100). Reduction in weight was 3.21% at 1750°C, 3.50% at 2000°C, 5.53% at 2300°C, and 5.57% at 3000°C. Debye-Scherrer patterns were taken by means of a BPC-3 (VRS-3) camera; the parameters L_a and L_c of the carbon crystallites were determined according to R. E. Warren (Ref. 13) and the radiographic density ϱ was calculated from equation $\varrho = zAm/abc$ ($Z=4$, number of C atoms in the unit cell; $A=12$, atomic weight of C; $m=1.66\cdot10^{-24}$g, mass of the H atom; $a=b=2.456$ A, constants of the graphite crystal lattice in the basal surface; $c=2d_{002}$, dimension of the unit cell along axis c). Table 1 indicates the data obtained. The adsorption properties of the specimens were determined in a wide range of relative pressure by means of a sorption balance for benzene, cyclohexane, and water at 20°C (Table 2). The constants of the isothermal lines of adsorption were calculated from Eq. (4) of the potential theory of adsorption: $a = a_0' \exp\left[(-B(T^2/\beta^2)(\log p_s/p)^2\right]$, where $a_0' = W_0/v$ (5)

corresponds to the maximum occupation of the adsorption volume W_o and v is the volume of 1 millimole of the adsorbed substance (Table 3). This carbon has a mixed structural type with two kinds of micropores as shown in Fig. 5 for benzene and A-1750. In the micropores of the first type, which correspond to a'_o, there occurs an increase of the adsorption potential. This effect is absent in large micropores of the second type (a''_o). The following relation has been obtained: $a'_o + a''_o = a^o$ (6).

a^o is the adsorption occurring at the beginning of hysteresis and capillary condensation of the vapor in the intermediate pores. This value is represented in Fig. 5 by a broken vertical line: $(p/p_s)_o = 0.175$. Based on the sorption isotherm, the volumes of the different types of pores were evaluated: $v_{mi} = v'_{mi} + v''_{mi}$ are the volumes of the two types of micropores; v_i is the volume of the intermediate pores; and v_s is the total volume of pores (Table 4). Tables 6 and 7 indicate the values found for the adsorption of organic substances and electrolytes. The crystallite surfaces (cylindrical lateral surface S_l, basal surfaces S_b) which were obtained from radiographical data do not coincide with calculations

according to Brunauer, Emmett and Teller, and Langmuir (Table 8). An attempt has been made to explain the structure by the example of A-950. It is assumed that binary micropores are formed by the combustion of two superposed crystallites when the carbon is heated. a is assumed to be the specific surface of the micropores composed of the surface α of the single micropores and of $1-\alpha$ of the "binary" ones. In the single micropores, n_1' molecules of one vapor and n_2' molecules of another vapor are assumed to be adsorbed. Correspondingly, n_1'', n_2'' molecules are adsorbed in the binary pores. ω_1, ω_2 are assumed to be the areas occupied by the adsorbed molecules. The following relations have been obtained:
$\alpha s n_1'/2\omega_1 + (1-\alpha) s n_1''/2\omega_1 = a_0'$ (11) and $\alpha s n_2'/2\omega_2 + (1-\alpha) s n_2''/2\omega_2 = a_0''$ (12)
resulting in $\alpha = (An_2'' - n_1'')/[(An_2'' - n_1'') - (An_2' - n_1')]$ (13), where
$A = a_0' \omega_1 / a_0'' \omega_2$ (14) and $s = 2a_0' \omega_1 / [\alpha n_1' + (1-\alpha) n_1'']$ (15). For A-950 one obtains $\alpha = 0.256$ and $s = 568\ m^2/g$. Thus, binary pores are formed for the major part (74%). This approximative model of micropores agrees with radiographic data and reproduces the measurements of adsorption correctly. D. N. Strazhesko, S. G. Tolkachev, and I. V. Uspenskiy are thanked for

S/062/61/000/001/002/016
B101/B220

Study of the nature of the micropore...

assistance. There are 5 figures, 8 tables, and 25 references: 15 Soviet-bloc and 9 non-Soviet-bloc.

ASSOCIATION: Institut fizicheskoy khimii Akademii nauk SSSR (Institute of Physical Chemistry, Academy of Sciences USSR). Institut goryuchikh iskopayemykh Akademii nauk SSSR (Institute of Mineral Fuels, Academy of Sciences USSR). Institut fizicheskoy khimii Akademii nauk USSR (Institute of Physical Chemistry, Academy of Sciences UkrSSR)

SUBMITTED: October 13, 1959

Card 5/5

S/062/61/000/001/003/016
B101/B220

AUTHORS: Dubinin, M. M., Zaverina, Ye. D., Kaverov, A. T., and Kasatochkin, V. I.

TITLE: Nature of the micropore structure of activated carbons. Communication 2. Activated carbons from polyvinylidene chloride

PERIODICAL: Izvestiya Akademii nauk SSSR. Otdeleniye khimicheskikh nauk, no. 1, 1961, 29-37

TEXT: The aim of the authors was to study the modification of the micropore structure of activated carbons brought about by physical, physicochemical, and chemical effects. The present report deals with the effect of thermal treatment on activated carbon produced from polyvinylidene chloride. The micropore structure of this carbon is not the result of the combustion of large amounts of carbon, but of the release of hydrochloric acid. Regarding the production of the carbon, Refs. 2,3 are referred to. Additional activation by CO_2 up to a loss in weight of about

Card 1/8

10% was effected at 750°C. This specimen was termed B-750. Further thermal treatment resulted - corresponding to the temperature - in the specimens B-1300 (loss in weight 0.38%), B-1750 (loss in weight 4.00%), B-2300 (loss in weight 5.35%), and B-3000 (loss in weight 7.17%). Like in Ref. 1, the structure of the carbon crystallites was studied by means of X-rays, and L_c, L_a, d_{002}, and the radiographic density ϱ were determined (Table 1). Moreover, the isothermal lines of adsorption at 20°C were determined for benzene (Fig. 2) and cyclohexane (Fig. 3). Prior to the adsorption, the carbon was evacuated at 450°C and about 1.10^{-6} mm Hg. The substantially reduced adsorption of cyclohexane is attributed to the more complex structure of its molecules. The structural characteristics are indicated in Table 2. a_{mi} is the adsorption corresponding to the complete filling of the micropores. In the case of benzene, it occurs at a relative pressure $p/p_s = 0.175$, and in the case of cyclohexane, at $p/p_s = 0.158$: a_s denotes the total adsorption at $p/p_s = 1$, v_s the total volume of pores, v_{mi} the volume of the micropores, and v_i that of the intermediate pores calculated from the difference. The experimental isothermal lines were compared with the equation of the potential theory of adsorption:

$a = (W_o/v)\exp\left[(-B(T^2/\beta^2)(\log p_s/p)^2\right]$ (1). W_o is the maximum adsorption volume, B a constant dependent on the size of the micropores, and β the affinity coefficient. The data calculated from (1) are indicated in Table 3. It was found (Fig. 5) that at a high relative pressure, the experimental data are lower than those obtained from Eq. (1). It is assumed that the reason is either ultraporosity or non-equilibrium. Referring to a paper of R. Franklin (Ref. 7), the structure of polyvinylidene chloride carbon is explained. The micropores are slit-shaped interstices between the crystallites or individual plane graphite lattices. They give room to hardly more than 2-3 layers of adsorbed molecules. On the assumption of 41 A^2 occupied area for one benzene molecule and of 38 A^2 occupied area for one cyclohexane molecule, a comparison between the specific surfaces calculated by X-ray analysis, sorption, and a bidisperse model (Table 4) results in the usability of a bidisperse model; the final clarification of the character of porosity is reserved for further investigations. The difference observed in specimen B-1750 regarding the adsorption of benzene and cyclohexane is attributed to a molecular

screening effect. This is shown by comparison with a Linde MC-5A screen. S. G. Tolkachev and I. V. Uspenskiy are thanked for assistance. There are 5 figures, 5 tables, and 10 references: 7 Soviet-bloc and 3 non-Soviet-bloc.

ASSOCIATION: Institut fizicheskoy khimii Akademii nauk SSSR (Institute of Physical Chemistry, Academy of Sciences USSR); Institut goryuchikh iskopayemykh Akademii nauk SSSR (Institute of Mineral Fuels, Academy of Sciences USSR)

SUBMITTED: December 26, 1959

Таблица 1

Данные рентгенографического исследования углей

1 Уголь	L_c, Å по (002)	L_c, Å по (004)	L_a, Å по (10)	L_a, Å по (11)	d_{002}, Å	ρ, г/см³
B-750	7	8	21	23	3,85	1,98
B-1300	7	8	24	24	3,73	2,05
B-1750	9	9	25	26	3,52	2,16
B-2300	10	10	38	40	3,46	2,20
B-3000	17	19	48	50	3,40	2,24

Legend to Table 1: 1) carbon.

Таблица 2

Структурные характеристики образцов углей серии B

1 Уголь	2 Пар	3 a_{mi}, мМ/г	$a_з$, мМ/г	4 v_{mi}, см³/г	5 $v_п$ см³/г	$v_з$ см³/г
B-750	C_6H_6	4,97	5,21	0,442	0,022	0,464
	C_6H_{12}	4,05	4,21	0,438	0,017	0,455
	H_2O	—	23,6	—	—	0,425
B-1300	C_6H_6	5,04	5,30	0,448	0,023	0,471
	C_6H_{12}	3,63	3,85	0,392	0,024	0,416
B-1750	C_6H_6	—	3,79	—	—	0,337
	C_6H_{12}	—	0,283	—	—	0,031
	H_2O	—	17,0	—	—	0,306
B-2300	C_6H_6	—	0,031	—	—	0,003
B-3000	C_6H_6	—	0,060	—	—	0,005

Legend to Table 2: 1) carbon; 2) vapor; 3) a_{mi}; 4) v_{mi}; 5) v_{interm}

Card 5/8

S/062/61/000/001/003/016
B101/B220

Nature of the micropore structure of...

Legend to Figs. 2 and 3:
1) B-750; 2) B-1300; 3) B-1750; 4) B-2300

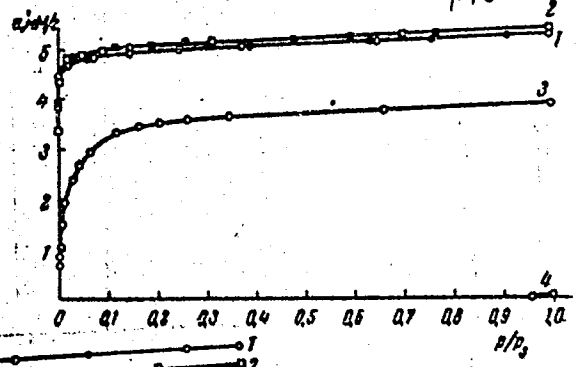

Fig. 2

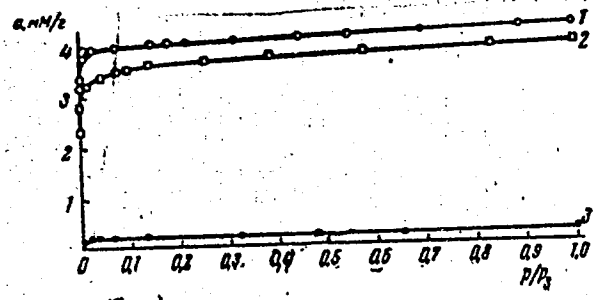

Fig. 3

Card 6/8

Legend to Table 3:
1) vapor; 2) carbon;
3) range of validity.

Таблица 3

Константы уравнения изотермы адсорбции

1 Пар	2 Уголь	a_{0r} мМ/г	W_{0r} см³/г	B·10⁴	β	3 Интервал применимости p/p_s
C_6H_6	B-750	5,94	0,527	0,482	1,00	$3\cdot10^{-6}$—$6\cdot10^{-3}$
	B-1300	5,75	0,510	0,597	1,00	$3\cdot10^{-6}$—$1,3\cdot10^{-2}$
	B-1750	3,31	0,294	2,23	1,00	$4\cdot10^{-5}$—$6\cdot10^{-3}$
C_6H_{12}	B-750	4,79	0,517	0,482	1,07	$6\cdot10^{-5}$—$6\cdot10^{-3}$
	B-1300	4,65	0,503	0,597	0,94	$2\cdot10^{-5}$—$2\cdot10^{-3}$

Legend to Table 4:
1) carbon; 2) X-ray surfaces; 3) based on sorption at $a_m = a_{mi}$; 4) based on bidisperse model.

Таблица 4

Удельные поверхности углей в м²/г

1 Уголь	2 Рентгеновские поверхности			3 По сорбции при $a_m = a_{mi}$		4 По бидисперсной модели	
	S_B	S_T	S	C_6H_6	C_6H_{12}	S	ε
B-750	920	1350	2270	1220	870	980	0,246
B-1300	810	1300	2110	1250	830	840	0,02
B-1750	730	1030	1760	940	<45—90*		
B-2300	480	910	1390	<8			
B-3000	360	500	860	<8			

Card 7/8

Legend to Fig. 5:
1) benzene; 2) cyclohexane.

Fig. 5

Card 8/8

LEVISHCHEV, A.N., inzh.; ZHENISHEK, V.Ye., inzh.; KAVERZIN, V.A., inzh.

Filter press IIM72-1000/45 with a hydraulic discharge of residue for the filtration of monochromic solutions. Khim. mash. no.4:41-44 Jl-Ag '61. (MIRA 14:8)

(Filters and filtration)

KAVERZNEVA, K. [Karerznieva, K.], doktor khim.nauk (Moskva)

Mysteries of life. Nauka i zhyttia 12 no.6:34-36 Je '62. (MIRA 15:7)

(Proteins)

SKURKOVICH, S.V.; RUTBERG, R.A.; MAKHONOVA, L.A.; KAVERZNEVA, M.M.; MALLER, A.R.

Plasmoleucothrombocytapheresis in children with acute leukemia during the remission period. Probl. gemat. i perel. krovi no.2:23-26 '65. (MIRA 18:11)

1. TSentral'nyy ordena Lenina institut gematologii i perelivaniya krovi (dir. - dotsent A.Ye.Kiselev) i Gorodskaya klinicheskaya detskaya bol'nitsa No.1 (glavnyy vrach N.S.Bonova), Moskva.

USSR

KAVERZNEVA, M. M.

Use of some antitumor antibiotics for the treatment of leukoses. Probl. gemat. i perel. krovi 7 no.7:31-39 Jl '62. (MIRA 15:7)

1. Iz gematologicheskoy kliniki (zav. - prof. M. S. Dul'tsin) TSentral'nogo ordena Lenina instituta gematologii i perelivaniya krovi (dir. - dotsent A. Ye. Kiselev) Ministerstva zdravookhraneniya SSSR.

(LEUKEMIA) (ANTIBIOTICS)

KAVERZNEVA, M.M.

Use of the antineoplastic antibiotics olivomycin (16749) and 6613 in the treatment of leukemia. Problemy gemat. i perel. krovi 8 no.8:22-25 Ag '63. (MIRA 17:8)

1. Iz genatologicheskoy kliniki (zav. - prof. M.S. Dul'tsin) TSentral'nogo ordena Lenina instituta gematologii i perelivaniya krovi (dir. - dotsent A.Ye. Kiselev) Ministerstva zdravookhraneniya SSSR.

PROCESSES AND PROPERTIES INDEX

Separation of some of the diketopiperazines of leather. N. I. Gavrilov and E. D. Kaverznev. *Izdatelstvo Tekhnikov: Kozhevennoe Proizvodstvo* 1931, No. 2, 24.—Because gelatin is the product of a chemical transformation of albumins of the collagen type it was considered of interest to investigate the presence of amino acid anhydrides in collagen. By hydrolysis in an autoclave of collagen and by digestion of collagen with trypsin it was shown that anhydride rings were actually present and that they were not formed in gelatinizing the collagen. The collagen mol. contains a larger amount of cyclic anhydrides than does the gelatin mol. In addn. to the previously sepd., optically active propylglycine and leucylglycine anhydrides a number of anhydride fractions of the AcOEt ext. were investigated. A somewhat impure anhydride was sepd. which contained proline and phenylalanine and another that contained glycine and phenylalanine. On hydrolyzing collagen 18% of NH_3 was formed as compared with 4.8% NH_3 formed on hydrolysis of gelatin.

A. A. Boehtlingk

ASM SLA METALLURGICAL LITERATURE CLASSIFICATION

KAVERZNEVA

CA

24

Enzymes of vegetable and fungus origins and their application in unhairing and in preserving wool. E. K. Kaverzneva and E. M. Olcinikova. *Izvestiya Tsentral. Nauch.-Issledovatel. Inst. Kozhevennoi Prom.* 1932, No. 2, 24.—Proteases were obtained from exts. of sprouting soy beans. They contain some of the proteases of the pepsin and trypsin type which are active at p_H 4–8. The optimum for tryptase acting on gelatin lies at p_H 7.4 and on peptone at p_H 7.0. Cyanic acid depresses the activity of the tryptase. The pepsinase penetrates into the adsorbing medium when subjected to adsorption by kaolin. Hide powder is energetically dissolved by soy exts. in an alk. medium (p_H = 8.0), less in a neutral medium and quite insignificantly in an acid medium. The skins are first kept for 1–2 days in a 0.1–0.2% soln. of NaOH at ordinary temp., immersed for 5 hrs. in 0.1% soln. of $NaHCO_3$ to lower the p_H. The fermentation vat soln. consisted of 1% $NaHCO_3$ and 10–30% of soy-bean fermentation ext.; the temp. was 30° and the duration 1–3 days, toluene or phenol also being added. From mold cultures, exts. and dry prepns. were prepd. The activity of the proteases is lowered through storage, this being particularly noticeable with exts. The proteases easily dissolve the collagen from the albumin of the hides; they have almost no effect on elastin and do not dissolve keratin even after treatment with 0.2% of NaOH. A slight activation of the proteases is observed if the soln. contains 0.05–0.1% Na_2SO_4 and $(NH_4)_2SO_4$. High concns. depress the action of the enzyme and $(NH_4)_2SO_4$ is even harmful. Tryptase is only slightly adsorbed by kaolin and the soln. is activated if sawdust is introduced. Sawdust prepns. are good unhairing agents. A. A. B.

ASM-SLA METALLURGICAL LITERATURE CLASSIFICATION

CA

29

Typical method of unhairing hides for sole leather with the preservation of the hair. E. D. Kaverzneva and A. S. Kostenko. *Tsentral. Nauch.-Issledovatel. Inst. Kozhevennoi Prom., Sbornik Rabot* No. 7, 20-34(1933).—The amt. of Na_2S in the unhairing of hides should not exceed 1.8 g. per kg. of the wt. of the raw hide (0 g. of Na_2S per 100 g. of the wt. of the hair on the hide). Large changes in concn. of Na_2S cause a change in the degree of adsorption of the Na_2S without affecting the unhairing conditions to an appreciable extent. The lower stability of the summer hair is due not to a difference in compn. but to the greater thickness of the winter hair. The loss of nitrogeneous substances of the derma during lining at 10-30° is for lye-salted hides 1.10-1.30 g. of N per kg. of the wet derma. These losses can be reduced in unhairing with Na_2S if the vat temp. does not exceed 24°. The hair was preserved best in treatment by the modified Taganrog method, which requires drumming of the hides; the Radishchev method can be used without drums. A. A. B.

ASB-SLA METALLURGICAL LITERATURE CLASSIFICATION

CA

29

PROCESSES AND PROPERTIES INDEX

Physical and chemical indexes characterizing the preparation of raw hides for tanning. E. D. Kaverzneva and Yu. S. Moskova. *Tsentral. Nauch.-Issledovatel. Inst. Kozhevennoi Prom. Sbornik Rabot* No. 7, 26-48(1935).—On treatment with $Ca(OH)_2$, the free water of collagen decreases and the combined water increases; this causes hydrolysis of albumin accompanying the collagen, as well as of the collagen itself. Thus, the active surface of the albumin and the number of active centers increase, and the combining power for tanning material improves. The effect is accelerated by increasing the temp. The collagen swells considerably when treated with Na_2S; this leads to a higher polarity of the tissue, and to an increase in the capillarity. Free water increases and combined water decreases; the albumin and to some degree the collagen are dissolved. The surface of the albumin increases but the number of active centers decreases. The ability to combine with tanning material is lower than on treatment with $Ca(OH)_2$. $Ca(OH)_2$ accelerates the diffusion much more than does sulfide treatment. The diffusion increases with increase in the hydrolysis of the collagen and discharge of nitrogenous substances into the soln. The degree of completeness of liming can be detd. from the total water content, the free and the combined water and the elasticity. The expt. procedure is described and the results are tabulated and plotted.

A. A. Boehtlingk

ASM-SLA METALLURGICAL LITERATURE CLASSIFICATION

CA

29

Influence of swelling of hides on the properties of the finished leather. E. D. Kaverzneva and Yu. S. Moskova. *Tsentral. Nauch.-Issledovatel. Inst. Kozhevenno-Prom., Sbornik Rabot* No. 9, 67-80(1938).—Swelling of the collagen in alk. solns. causes changes in the state of the raw hides, and changes of less importance in the finished leather. Lime causes less swelling than Na_2S, but limed hides are more porous and the leather has a higher elasticity, elongation and a higher water-absorbing power than that from hides treated with Na_2S and NaOH. The amt. of swelling cannot be accepted as a criterion of the thoroughness of liming processes. The expts. are described and results are tabulated and plotted. Thirteen references.

A. A. Boehtlingk

ASM-SLA METALLURGICAL LITERATURE CLASSIFICATION

1ST AND 2ND ORDERS

PROCESSES AND PROPERTIES INDEX

3RD AND 4TH ORDERS

a-3

ASM-SLA METALLURGICAL LITERATURE CLASSIFICATION

PROCESSES AND PROPERTIES INDEX

B-2-5

Inst. of Org. Chem., Acad. Sci. USSR, 1945

ASM-SLA METALLURGICAL LITERATURE CLASSIFICATION

1ST AND 2ND ORDERS

PROCESSES AND PROPERTIES INDEX

3RD AND 4TH ORDERS

BC

Transformations of macro-molecules of cellulose by means of oxidising agents. II. Stability of the glucosidic linking of cellulose. E. D. Kavtsova and V. I. Ivanov (*Bull. Acad. Sci. U.R.S.S., Cl. Sci. Chim.*, 1944, 222—226).—The ether obtained by replacing the CH_2OH of cellulose by $CH_2{\cdot}O{\cdot}CPh_3$ is not oxidised by atm. O_2 in Schweitzer's solution. This supports the authors' hypothesis (*Uspekhi Chim.*, 1944, 13, 231) that oxidative degradation of cellulose involves the steps $\cdot O{\cdot}\dot{C}H{\cdot}\dot{C}H{\cdot}CH_2{\cdot}OH \rightarrow \cdot O{\cdot}\dot{C}H{\cdot}\dot{C}H{\cdot}CHO \rightarrow \cdot O{\cdot}\dot{C}H{\cdot}\dot{C}H{\cdot}CH_2{\cdot}OH$, the last being followed by rupture of the glucoside linkage.

A cuprammonium solution of cellulose CPh_3 ether is aërated for 190 hr. at 16—19°. The ether is recovered unchanged from the solution, and the cellulose regenerated from it shows no signs of oxidation. R. T.

ASB-SLA METALLURGICAL LITERATURE CLASSIFICATION

KAVERZNEVA, YE. D.

Ivanov, V.I. and Kaverzneva, Ye. D. "Reaction capacity of hydroxyl radicals of cellulose and the extraction of 6- desoxycelluloses," in symposium: Issledovaniya v oblasti tsellyulozy i yeye sputnikov, Moscow-Leningrad, 1948, p. 56-63 - Bibliog: 5 items

SO: U-2888, Letopis Zhurnal'nykh Statey, No. 1, 1949

KAVERZNEVA, YE. D.

Ivanov, V.I. and Kaverzneva, Ye. D. "Acidification of cellulose in a cupric-ammonium solution," in symposium: Issledovaniya v oblasti tsellyulozy i yeye sputnikov, Moscow-Leningrad, 1948, P. 81-87 - Bibliog: p. 86-87

SO: U-2888, Letopis Zhurnal'nykh Statey, No. 41, 1949

PA 63/49T10

KAVERZNEVA, YE. D.

USSR/Chemistry - Synthesis Jul/Aug 49
Chemistry - Desoxycellulose

"Synthesis of 6-Desoxycellulose," Ye. D. Kaverzneva, V. I. Ivanov, A. S. Salova, Inst of Org Chem, Acad Sci USSR, 9½ pp

"Iz Ak Nauk SSSR, Otdel Khim Nauk" No 4

Describes different methods of preparing this compound, and shows that the highest degree of conversion of a primary alcohol into a methyl group with the lowest degree of destruction of the macromolecule is obtained by conducting the synthesis through the stage of unsaturated desoxy-derivate of cellulose. Submitted 12 Jul 48.

63/49T10

[redacted]

KAVERZNEVA, Ye. D.

"Ketone Groups in the Oxyl Malecule of Cellulose," Dok. AN, 68 No.5, 1949.

KAVERZNEVA, Ye. D., KURSANOV, D.N., KABACHNIK, M.I., PRILEZHAYEVA, Ye.N., SOKOLOV, N.D. and FREYDLINA, R.Kh.

"The Current State of Chemical Structure," Usp.Khim., 19, No.5, pp 529-544, 1950.

Translation W-16104, 30 Dec 50

Ch., Lab. Bellulose and Lignin, Inst. Organic Chem., Dept. Chem. Sci., Acad. Sci., 1949-.

Acting Ch., Lab Chemistry, Dept. Physiological Albumin and Products Albuminous Conversions, Inst. Physiol., Dept. Medico-Biol. Sci., Acad. Med. Sci., 1946

GTRSPL Vol. 5-No. 1 Jan. 1952

Kaverzneva, E.D. (Institute of Organic Chemistry, U.S.S.R. Academy of Sciences), New data on the chemical composition of oxycellulose, 481-3

Akademiya Nauk, S.S.S R., Doklady Vol. 78, No. 3

25

BTR

9214* Chemical Transformation of Cellulose Macromolecules Under the Influence of Oxidizers. (In Russian.) Report 4. Lactone-Type Bonds in Oxycellulose Macromolecules and Their Influence on Detection of Carbonyl Groups by Condensation With Hydroxylamines. E. D. Kavetzneva and A. S. Sakova. Report 5. Proof of the Existence of α-Oxyketone Groups in Oxycellulose. E. D. Kavetzneva. Izvestia Akademii Nauk SSSR, Section of Chemical Sciences, Nov.-Dec. 1951, p. 782-794.

K KAVERZNEVA, Ye. D.

CA

23

Chemical transformations of the macromolecule of cellulose under the action of oxidizing agents. VI. The presence in oxycelluloses of the groupings of carbonic esters and their effect on the determination of uronic carboxylic groups. E. D. Kaverzneva, V. I. Ivanov, and A. S. Salova. *Izvest. Akad. Nauk S.S.S.R., Otdel. Khim. Nauk* 1952, 188-9; cf. *ibid.* 1951, 782.—The results of detn. of total and uronic carboxyl groups in oxycelluloses (I) do not agree when products oxidized by NaOCl in acid or neutral media are compared. The cause for the deviation lies in participation of lactonized uronic carboxyls and the presence of small amts. of carbonic esters. The latter are very unstable and are readily hydrolyzed by dil. alkalies in the cold or by acids on warming; these groups may be responsible for low stability of I produced by acidic oxidation. Boiling pure cotton with 12% HCl leads to evolution of but 0.04% CO_2 (by wt.). Similarly treated uronic compds. liberate CO_2 rather slowly and do not affect detns. such as those of uronic acids which can be completed by refluxing 5 hrs. The evolution of CO_2 from such treatment of I shows a distinct break after 5 hrs., and the slow continuing reaction is almost absent in specimens prepd. in alk. medium. The purely mech. causes were shown to be inoperative in suitable expts. The carbonate unit can be formed by oxidation of the C atom adjacent to the O atom in the ring structure of the saccharide.

G. M. Kosolapoff

Journal of Applied Chemistry
May 1954
Fibers

(3)

oxidants. VII. Chemical transformations of cellulose during its oxidation by sodium hypochlorite. E. D. Kaverzneva, V. I. Ivanov, and A. S. Solova (*Izvestia*, 1952, No. 4, 751—762).—Quantitative micromethods are described whereby it is established that the oxycelluloses formed by NaClO oxidation contain uronic and non-uronic -COOH, -CHO (on C_6), α-hydroxyketonic, lactone, and esterified -COOH groups; the products of acid and neutral oxidations are similar and differ from these of alkaline oxidation. Mechanism of oxidative breakdown of cellulose at different pH are outlined.

R. C. Murray

KAVERZNEVA, Ye. D.

11 Sep 52

USSR/Chemistry - Cellulose

"Primary Oxidation Changes in Cellulose Due to Hydrogen Peroxide," V. I. Ivanov, Ye. D. Kaverzneva, Z. I. Kuznetsova, Inst of Org Chem, Acad Sci USSR

"Dok Ak Nauk SSSR" Vol 86, No 2, pp 301-304

The primary change in the simple members of the cellulose macromol during the action of hydrogen peroxide is conversion to a glucosone structure. Depending on the pH, the surrounding groups will undergo changes described in previous work. Presented by Acad A. N. Nesmeyanov.

PA 235T23

"KHIMIYA OKISLITEL'NYKH PREVRASHCHENIY TSELLYULOZY"

by KAVERZNEVA, Ye. D., Institute Organic Chemistry, Academy of Sciences SSSR, Moscow, USS

SO: ABSTRACTS OF PAPERS, XIII International Congress of Pure and Applied Chemistry, Stockholm, July 29-Aug 4, 1953
Uppsala, Aug 5 to 7, 1953
p. 232

KAVERZNEVA, Ye. D.

"Les transformations chimiques de la cellulose sous l'action des oxydants,"

A paper presented at the 13th Intl. Congress of Pure and Applied Chemistry, Stockholm, 29 Jul - 4 Aug 53

KAVERZNEVA, E. D.

(3) 6

Chemical transformations of cellulose macromolecules in oxidation. Transformation of cellulose in oxidation with hydrogen peroxide. V. I. Ivanov, E. D. Kaverzneva, and Z. I. Kuznetsova (*Izvestia*, 1953, No. 2, 374–384). — Oxidative degradation of cellulose by H_2O_2 is most intense at pH >11 or <4; processes similar to those with simple sugars occur: oxidation of CH_2OH groups to –CHO and –COOH, of –CHOH groups to –CO, ring-fission at the C_2–C_3 bond forming two –CHO or –COOH groups. Differences between the properties and compositions of the oxycelluloses produced by H_2O_2 and NaClO are discussed.

R. C. MURRAY.

[redacted] KAVERZNEVA, E.D.

KAVERZNEVA, Ye.D., doktor khimicheskikh nauk.

International Congress on Theoretical and Applied Chemistry. Vest.AN SSSR 23 no.10:85-89 O '53. (MLRA 6:11)

(Chemistry--Congresses)

KAVERZNEVA, Ye.D.; IVANOV, V.I.; SAIOVA, A.S.

Chemical transformations of cellulose in the hypochlorite treatment process. Bum.prom. 28 no.7:6-11 Jl '53. (MLRA 6:7)

1. Institut organicheskoy khimii Akademii nauk SSSR.
(Cellulose) (Sodium hypochlorite)

KAVERZNEVA, Ye. D.

ZELINSKIY, N.D., akademik; KOCHESHKOV, K.A., redaktor; KAVERZNEVA, Ye.D., dokter khimicheskikh nauk, redaktor; LEVINA, R.Ya., redaktor; YUR'YEV, Yu.K., redaktor.

[Collected works] Sobranie trudov. Moskva, Izd-vo Akademii nauk SSSR. Vol. 1. 1954. 514 p. (MLRA 7:8)

1. Chlen-korrespondent AN SSSR (for Kocheshkov)
(Chemistry--Collected works)

Chemical changes in cellulose during peroxide bleaching [illegible] Kaverznova, V. I. Ivanov, and [illegible] 1951, 14, No. 3, 31-34. The decrease in η and degree of [illegible] cellulose during peroxide bleaching depends [illegible] the pH of the medium and is due to chemical changes [illegible] glucosan, glucose, glucohexose, dialdehyde and ketone groups [illegible] reduce the stability of the glucosan-glucose [illegible] pH [illegible]

ZELINSKIY, N.D.; KAZANSKIY, B.A., akademik; BALANDIN, A.A., akademik; KOCHESHKOV, K.A.; SHUYKIN, N.I.: KAVERZNEVA, Ye.D., doktor khimicheskikh nauk; LEVINA, R.Ya., doktor khimicheskikh nauk; PLATE, A.F.; doktor khimicheskikh nauk; RUBINSHTEYN, A.M. doktor khimicheskikh nauk; YUR'YEV, Yu.K., doktor khimicheskikh nauk.

[Collected works] Sobranie trudov. Moskva, Izd-vo Akad.nauk SSSR. Vol. 3 1955 719 p. (MLRA 8:8)

1. Chlen-korrespondenty AN SSSR (for Kocheshkov, Shuykin).